HP.BCN

Neo Suction Airbrush

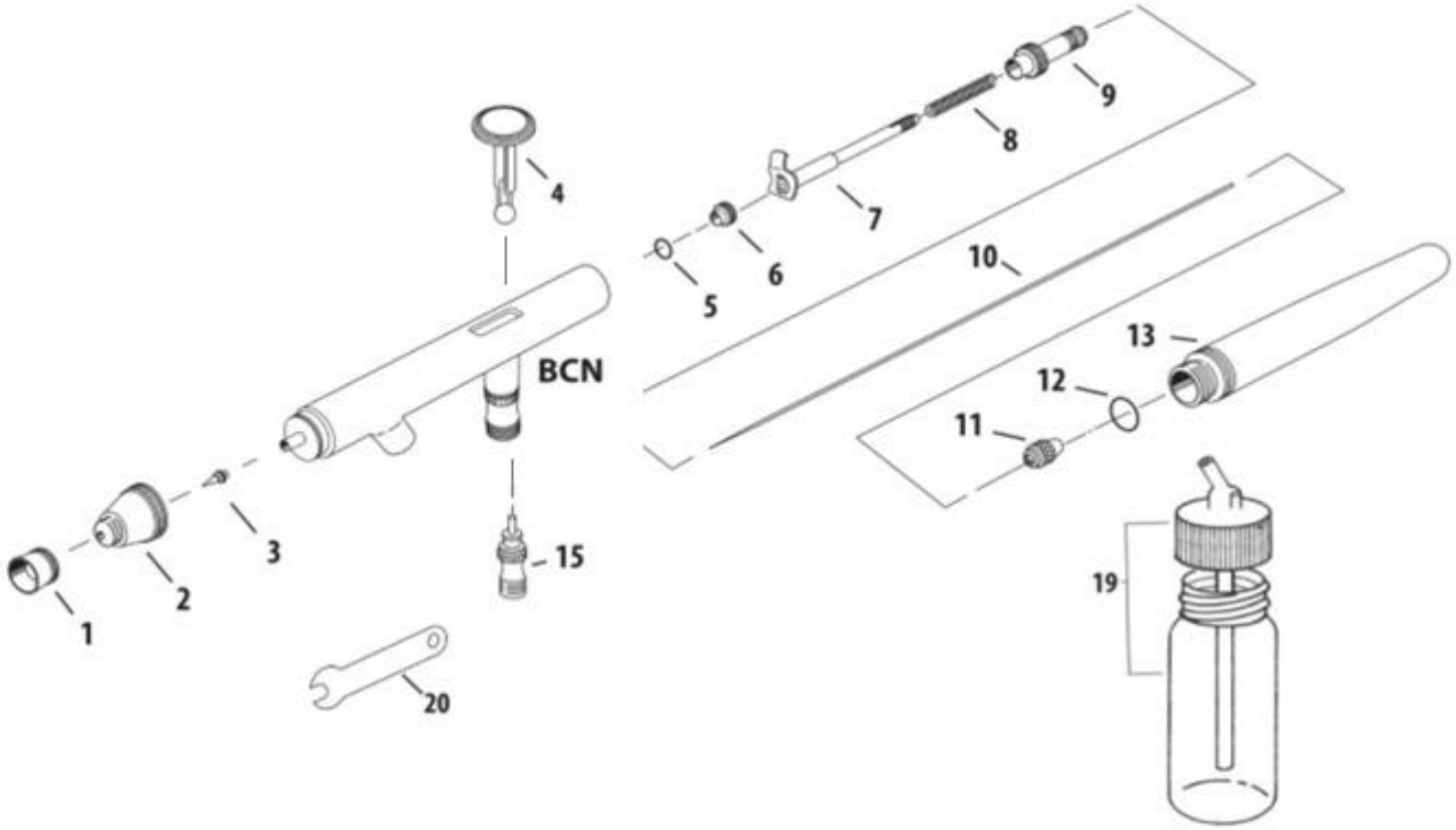

ITEM NO.	PART NO.	DESCRIPTION	ITEM NO.	PART NO.	DESCRIPTION
1	N1101	Needle Cap	13	N0901	Handle
2	N1402	Nozzle Cap	14	N1502	Air Valve O Ring
3	N0802	Nozzle	15	N0201	Valve Set with Valve Spring
4	N1001	Main Lever	19	A4702	Bottle 56 ml
5	N1501	Needle Packing (PTFE)	20	N1651	Spanner
6	N1251	Needle Packing Screw			
7	N1151	Needle Chucking Guide			
8	N1351	Needle Spring			
9	N1701	Spring Guide			
10	N0752	Needle			
11	N1201	Needle Chucking Nut			
12	N1051	Needle O Ring			

Updated: March 2021