# SP.DH810 Sparmax Mini Gravity Spraygun

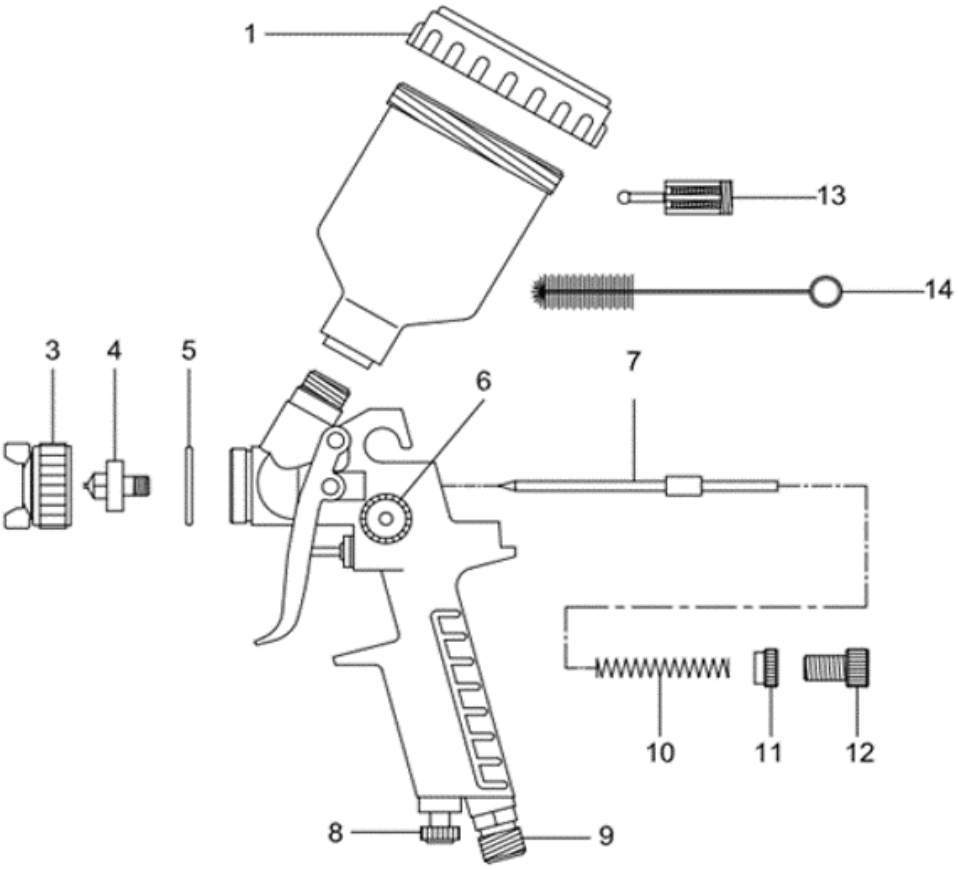


| ITEM NO. | PART NO. | DESCRIPTION | ITEM NO. | PART NO. | DESCRIPTION |
|---|---|---|---|---|---|
| 1 | PS.125 | Gravity Cup 125 ml | 11 | N/A | Fluid Control Locking Nut |
| 3 | SP.0034 | Air Cap | 12 | N/A | Fluid Control Knob |
| 4 | SP.0070 | Fluid Nozzle 0.5 mm | 13 | PS.FILTERG1 | Optional Filter |
| 4-1 | SP.0353 | Fluid Nozzle 0.8 mm | 14 | PS.1290 | Brush Set |
| 5 | N/A | O Ring | | | |
| 6 | N/A | Pattern Adjustment Screw | | | |
| 7 | SP.0089 | Fluid Needle 0.5 mm | | | |
| 7-1 | SP.0356 | Fluid Needle 0.8 mm | | | |
| 8 | N/A | Air Adjustment Valve | | | |
| 9 | N/A | Airline Connector (PS 1/4") | | | |
| 10 | N/A | Needle Spring | | | |

Updated: March 2021