SP.DH3 Sparmax Gravity Airbrush

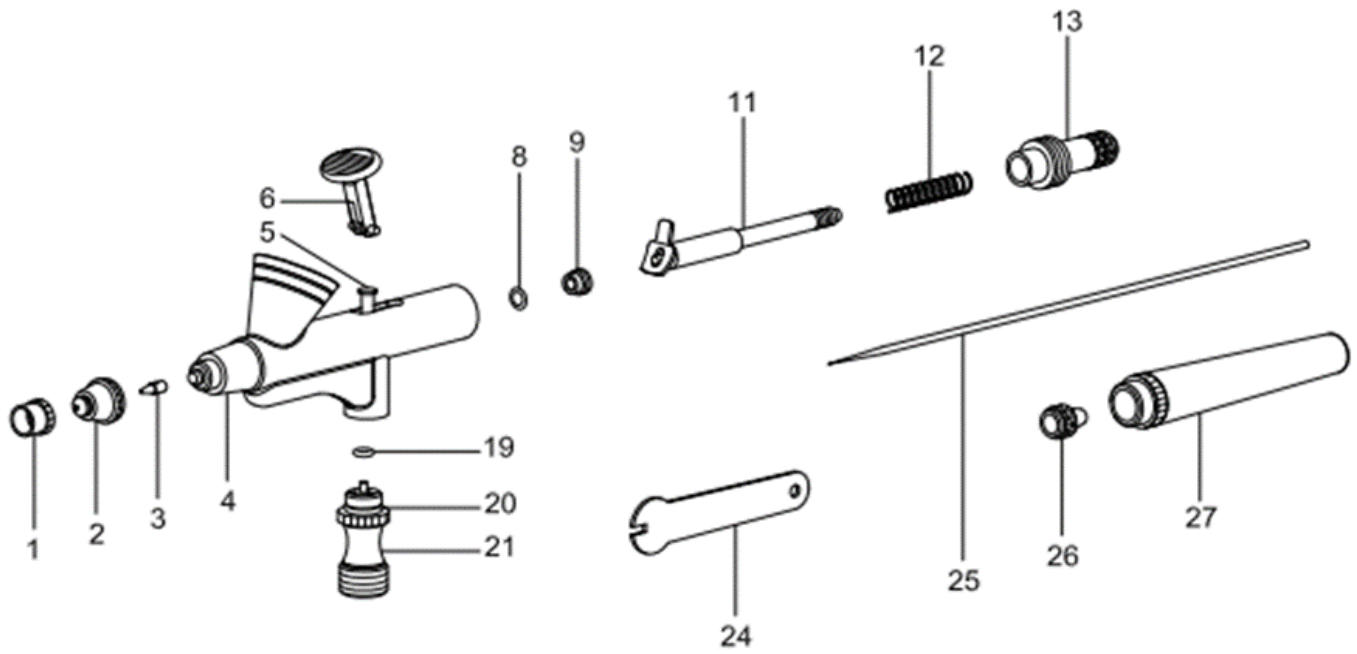

ITEM NO.	PART NO.	DESCRIPTION	ITEM NO.	PART NO.	DESCRIPTION
1	SP.0326	Needle Cap	13	N/A	Spring Case
1-1	SP.0457	Crown Cap - Optional	19	SP.0119	Piston O Ring
2	SP.0328	Nozzle Cap	20,21	SP.0214	Air Valve Set
3	SP.0011	Nozzle	24	SP.0234	Wrench
4	N/A	Body	25	SP.0391	Needle
5	SP.0367	Piston	26	SP.0255	Needle Chucking Nut
6	SP.0330	Trigger	27	SP.0593	Handle
8	SP.0334	Needle Guide O Ring			
9	SP.0194	Needle Packing Screw			
11	SP.0269	Needle Chucking Guide			
12	SP.0298	Needle Spring			

Updated: March 2023